CUSTOMER DRAWING

REVISIONS				
SYM	ECN No.	DESCRIPTION	DATE	APPROVED
AX1			09/13/2007	Joan

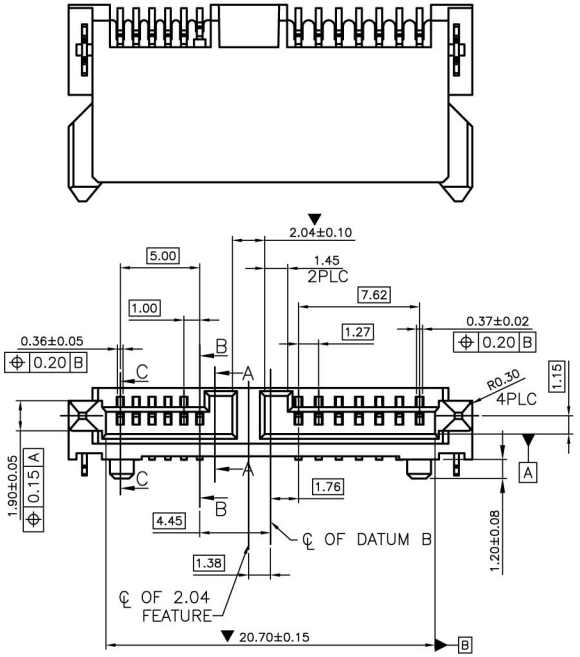

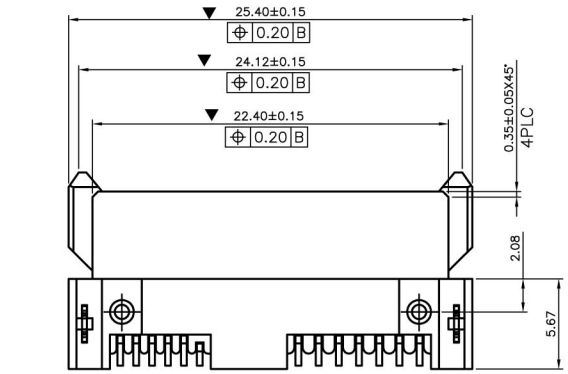

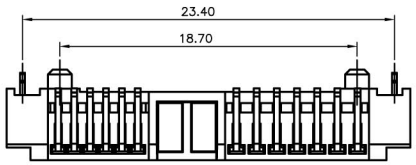

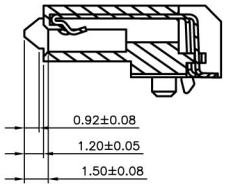

SECTION B–B

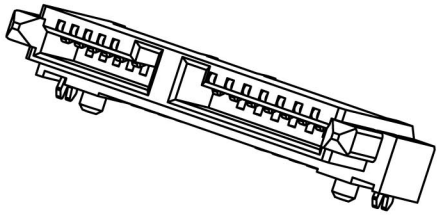

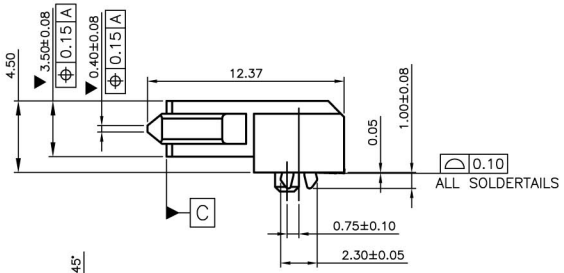

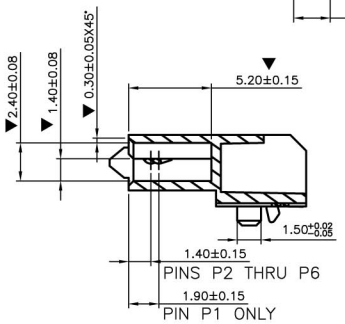

SECTION A–A

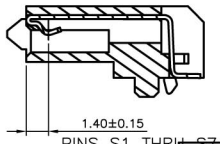

SECTION C–C

NOTES:
1.MATERIAL:
HOUSING:LCP(POLYPLASTICS E130i))WITH 30% G/F UL94 V–0
COLOR:BLACK
CONTACT:PHOSPHOR BRONZE C5191 H,T=0.25mm
BOARD LOCK:PHOSPHOR BRONZE C5191 H T=0.30mm
2.FINISH:
CONTACT:15u" GOLD/TIN PLATING ON CONTACT AREA
100u" MIN.TIN PLATING ON SOLDERTAILS
50u" MIN.NICKEL UNDERPLATING OVER ALL
BOARD LOCK:100u" MIN.TIN PLATING ON SOLDERTAILS
50u" MIN.NICKEL UNDERPLATING OVER ALL

PART NUMBER SYSTEM: T5048E45 X B402U4

Cantact Plating

1 = G/F
2 = 15u
3 = 30u

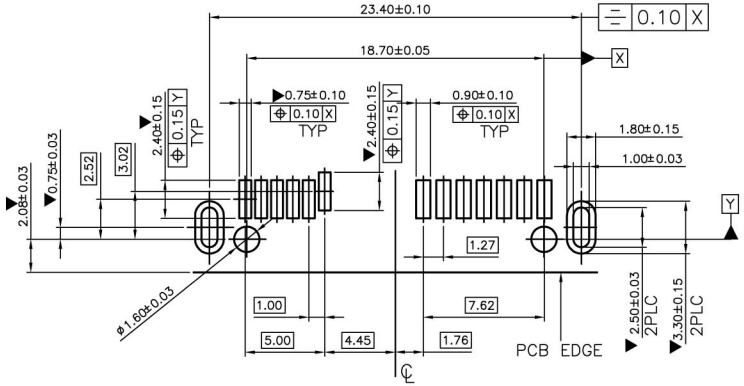

RECOMMEND PCB LAYOUT (T=1.2)
PCB TOLERANCE:±0.05

TOLERANCE UNIT(mm)		APPROVALS	DATE
X.	±0.50	DRAWN Joan	09/13/2007
X.X	±0.38	CHECKED Johnson Chen	09/13/2007
X.XX	±0.25	APPROVED Johnson Chen	09/13/2007
X.XXX	±0.10		
ANGULAR	±3°		
UNLESS OTHERWISE SPECIFIED		UNIT MM	

TC&C Electronic Co,.Ltd

TITLE

SATA 7+6P Right Angle Receptacle SMT TYPE

SCALE N.A.	PART NO.	DRAWING NO.	REV.
SHEET 1 OF 1	T5048E45XB402U4	SATA-1336C2A	AX1
CUSTOMER CODE		CUSTOMER PART NO.	