REVISIONS				
SYM	ECN No.	DESCRIPTION	DATE	APPROVED
AX1			9/08/2006	Joan

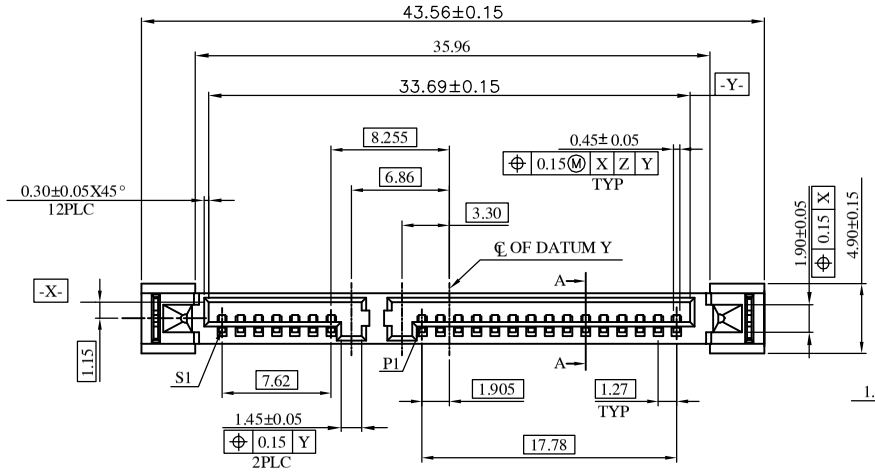

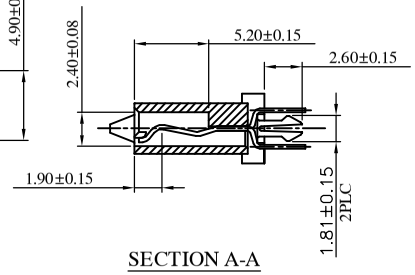

SECTION A-A

NOTES:
MATERIAL:
HOUSING: THERMOPLASTIC HIGH TEMP WITH 30%G/F UL94 V-0
COLOR:BLACK
CONTACT:PHOSPHOR BRONZE C5191 H,T=0.30mm
BOARD LOCK:BRASS C2680 H,T=0.30mm
FINISH:
CONTACT: 15u" GOLD/TIN PLATING ON CONTACT AREA
100u" MIN. TIN PLATING ON SOLDERTAILS
50u" MIN.NICKEL UNDERPLATING OVER ALL
BOARD LOCK:100u" MIN. TIN PLATING ON SOLDERTAILS
50u" MIN.NICKEL UNDERPLATING OVER ALL

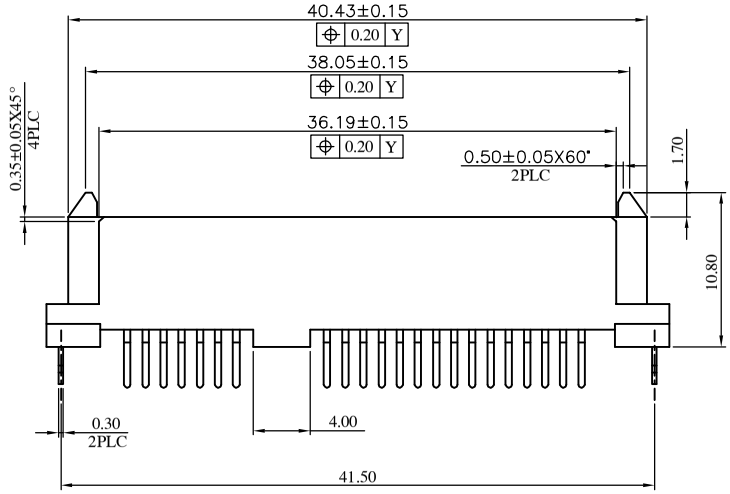

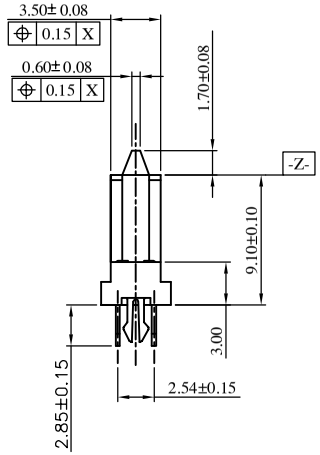

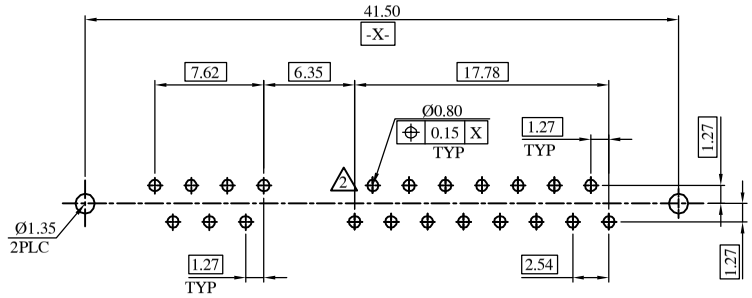

RECOMMEND PCB LAYOUT
PCB TOLERANCE:±0.05

TOLERANCE UNIT(mm)		APPROVALS	DATE
X.	±0.38	DRAWN Joan	9/08/2006
X.X	±0.25	CHECKED Tank Lee	9/08/2006
X.XX	±0.15	APPROVED Johnson	9/08/2006
X.XXX	±0.08		
ANGULAR	±2°		
UNLESS OTHERWISE SPECIFIED		UNIT MM	

TC&C Electronics Co,.Ltd

TITLE: SATA 7+15P板端雙排腳魚叉 DIP型

SCALE N.A.	PART NO.	DRAWING NO.	REV.
SHEET 1 OF 1	T504861125202U4	SATA-1106C2A	AX0
CUSTOMER CODE		CUSTOMER PART NO.	

TC&C Electronic Co., Ltd. RoHS Compliant

ISSUED BY TC&C TAIWAN PDF format D.C. 2006-08-14