REVISIONS			
LTR	DESCRIPTION	DATE	APPROVED
A	INITIAL RELEASE LTE-9403063	03/24/05'	WILLIAM

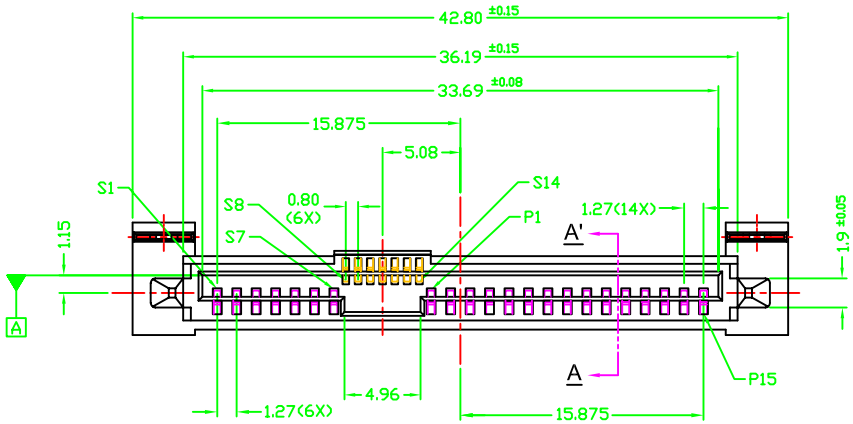

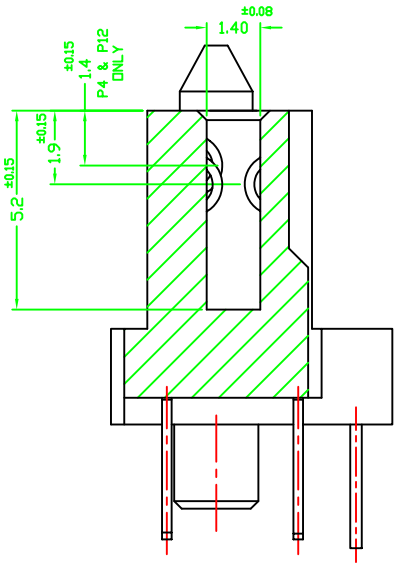

SECTION: A - A'
SCALE : 5 / 1

NOTES:

1. MATERIALS :
   - HOUSING : THERMAL TEMPERATURE RESIN, GLASS FILLED, UL94-V0; COLOR : BLACK .
   - TERMINAL: COPPER ALLOY.
   - BOARD LOCK: COPPER ALLOY.
2. PLATING :
   - TERMINAL:
   - UNDER PLATING : NICKEL 50u" MIN. OVERALL.
   - CONTACT AREA : GOLD 30 u" MIN.
   - SOLDER TAIL AREA : Sn / Cu 80u" MIN.
   - BOARD LOCK:
   - Sn / Cu 100u" MIN.OVER UNDER-PLATED NICKEL 50u" MIN.
3. CONNECTOR PIN ASSIGNMENTS

S1	-	GROUND	P1	-	3.3 V
S2	-	A+	P2	-	3.3 V
S3	-	A-	P3	-	3.3 V
S4	-	GROUND	P4	-	GROUND
S5	-	B-	P5	-	GROUND
S6	-	B+	P6	-	GROUND
S7	-	GROUND	P7	-	5 V
S8	-	GROUND	P8	-	5 V
S9	-	A+	P9	-	5 V
S10	-	A-	P10	-	GROUND
S11	-	GROUND	P11	-	GROUND
S12	-	B-	P12	-	GROUND
S13	-	B+	P13	-	12 V
S14	-	GROUND	P14	-	12 V
			P15	-	12 V

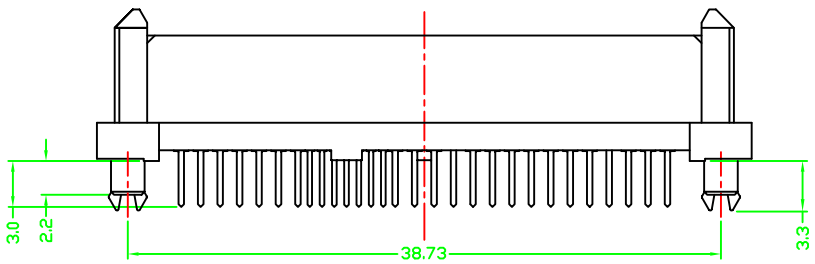

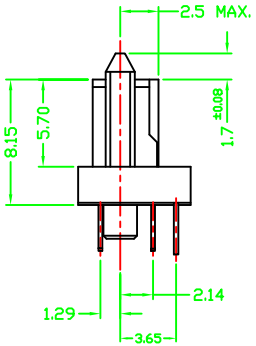

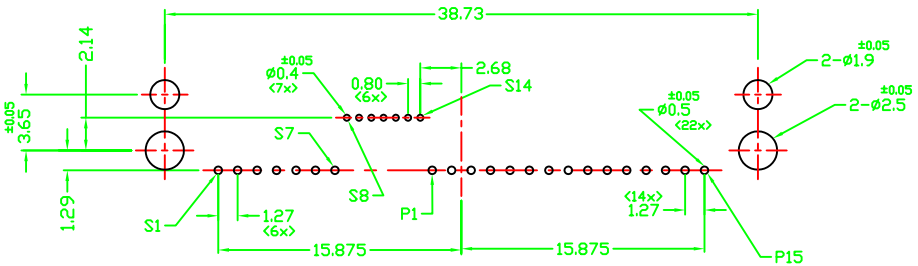

RECOMMENDED P.C.B. LAYOUT
PCB THICKNESS : 2.2mm

PRELIMINARY

DRAWN	PERRY CHEN 02/22/05'	SCALE: 2 : 1	TC&C Electronics Co,.Ltd
CHECKED		SHEET: 1 OF 1	
APPROVALS		UNIT: mm	

DIMENSIONS ARE IN BRACKET (X.XX) ARE IN UNCH TOLERANCES ARE:
DECIMALS ANGLES
.XX ± .010 ± 3°
.XXX ± .005

DIMENSIONS ARE IN MILLIMETERS TOLERANCES ARE:
DECIMALS ANGLES
.X ± .25 ± 3°
.XX ± .13

FILE PATH: F:

TITLE.
2 ROW SAS-29P DIP
TYPE CONNECTOR

SIZE A4 | DRAWING NO. T5049C2967220N6 | REV. A