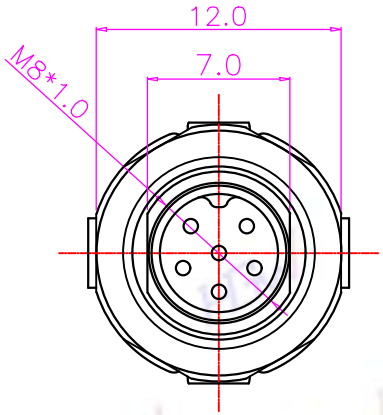


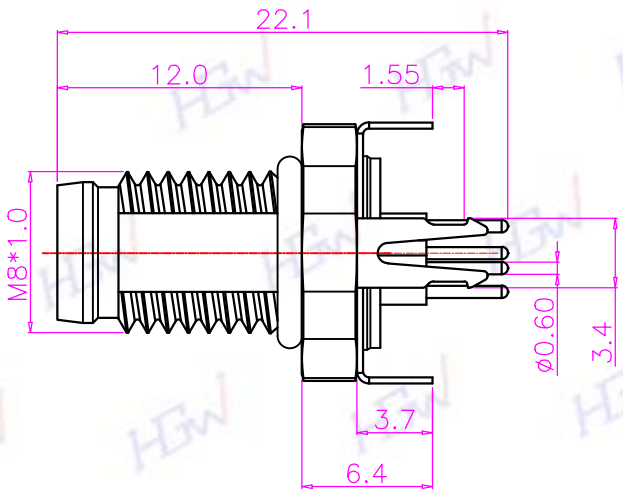


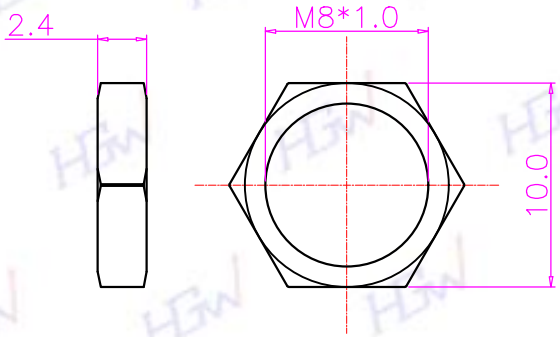


NUT

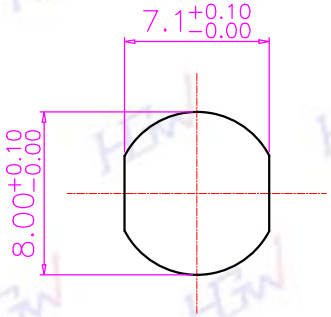


RECOMMENDPANEL CUT-OUT

TABLE A

| 5PIN | 6PIN |
|---|---|
| HGM3-M805P-27-11 | HGM3-M806P-10-11 |

1.MATERIAL
- 1-1.HOUSING: PA66 UL94V-0 ; COLOR: BLACK
- 1-2.CONTACT: BRASS
- 1-3.NUT: BRASS
- 1-4.SHELL: BRASS
- 1-5.O-RING: NBR
- 1-6.GROUND: PHOSPHOR BRONZE

2.FINISH
- 2-1.CONTACT: GOLD FLASH PLATED
  UNDER PLATED: NICKEL
- 2-2.NUT: NICKEL PLATED
- 2-3.SHELL: NICKEL PLATED
- 2-4.GROUND: NICKEL PLATED

3.ELECTRICAL SPECIFICATION
- 3-1.RATED CURRENT: 2A
- 3-2.RATED VOLTAGE: 30V
- 3-3.WATERPROOF: IP67

4.ENVIRONMENTAL
- 4-1.OPERATION TEMPERATURE: -40°C~85°C

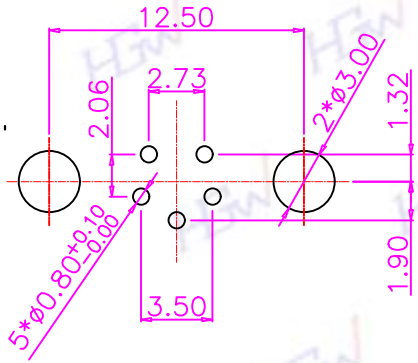


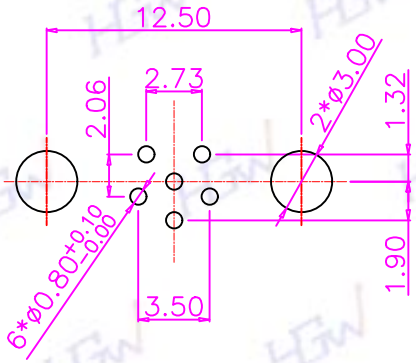


RECOMMEND P.C.B LAYOUT

禾剛企業有限公司
HOU GUN ENTERPRISE CO., LTD.

| REV | DESCRIPTION | DATE |
|---|---|---|
| A | | 230816 |

客戶圖面確認簽回章

TITLE
M8(M)前鎖插板式(梅花92度)帶接地

| | | |
|---|---|---|
| P/N: | SEE TABLE A | |
| DWG. NO: | QC10902 | |
| DR. Dan | | UNIT:mm |
| CH. Jason | SCALE | 1:1 |
| AP. Lanny | UNLESS OTHERWISE SPECIFIED TOLERANCES: X ± 0.20 XXX ± 0.05 XX ± 0.10 ANGLE ± 1° | |
| REV. A | SHEET 1/1 | |