CUSTOMER DRAWING

夹板厚度1.00mm规格

REVISIONS				
SYM	ECN No.	DESCRIPTION	DATE	APPROVED
A		NEW	06/20/2016	JOHNSON

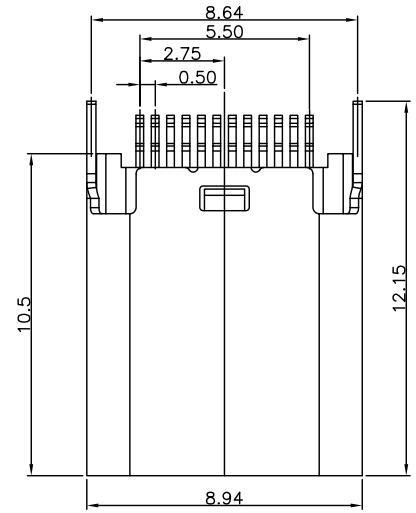

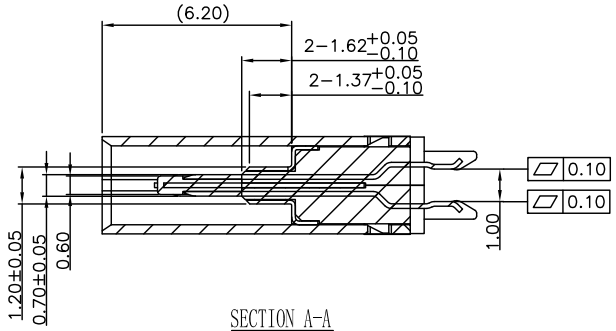

SECTION A-A
SCALE 1:1

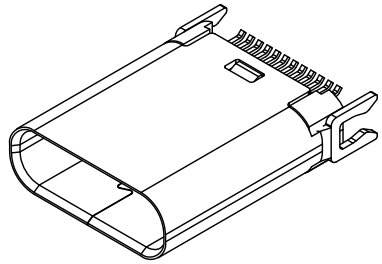

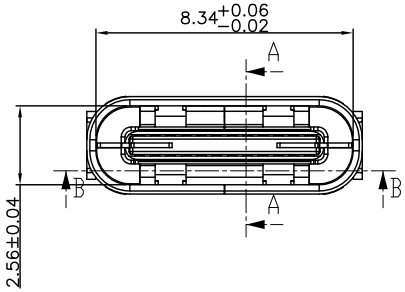

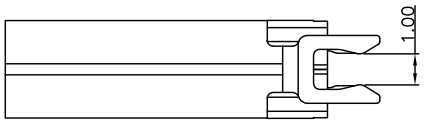

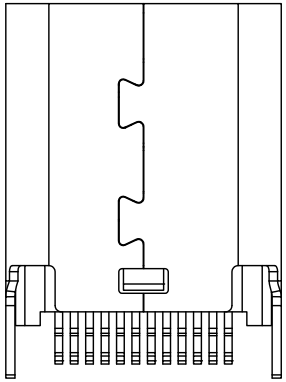

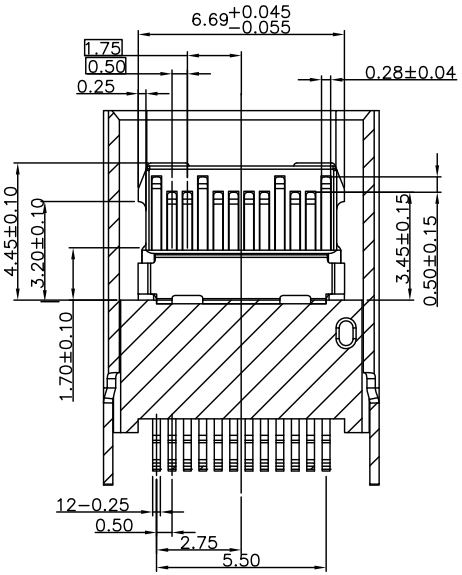

SECTION B-B
SCALE 1:1

NOTES:

1.MATERIAL:
MOLDING: LCP UL94 V−0
CONTACT:COPPER ALLOY.
GOLD PLATED 30u" Min ON CONTACT AREA,100u''
Min TIN (LEAD FREE) ON SOLDER AREA,
SHELL: SUS304−H,T=0.30±0.03mm
50u" NICKEL PLATING OVER ALL.
SHILD:SUS304−H,T=0.12±0.03mm

2.MECHANICAL:
INSERTION: 5~20N.
EXTRACTION: 8~20N.
DURABILITY: 10000 CYCLES

3.ELECTRICAL:
CURRENT: 5A MIN FOR VBUS;
0.25A MIN FOR OTHER.
VOLTAGE: 5VAC MAX
WITHSTANDING VOLTAGE: 100V AC.
CONTACT RESISTANCE: 40mΩ MAX.
INSULATION RESISTANCE: 100MΩ MIN.

4.ENVIRONMENTAL
TEMPERATURE RANGE −55°C ~ +85°C

TOLERANCE UNIT(mm)		APPROVALS	DATE	TC&C Electronics Co.,Ltd			
X.	±0.30	DRAWN WINKI	06/20/2016	TITLE USB 3.1 C FEMALE(夹板式(夹板厚度1.0MM)/24PIN)			
X.X	±0.25	CHECKED JOHNSON	06/20/2016				
X.XX	±0.15	APPROVED JOHNSON	06/20/2016	SCALE N.A.	PART NO. T50E7702XXXX1ET	DRAWING NO. T50E7702XXXX1ET A	REV. A
X.XXX	±0.08			SHEET 1 OF 3			
ANGULAR	±2°						
UNLESS OTHERWISE SPECIFIED		UNIT MM		CUSTOMER CODE	CUSTOMER PART NO.		

CUSTOMER DRAWING

REVISIONS				
SYM	ECN No.	DESCRIPTION	DATE	APPROVED
A		NEW	06/20/2016	JOHNSON

T50E7601 X XX X 1ET

CANTACT PLATING
0=G/F
1=2~3U
2= 5U
3=10u
4=15u
5=30u

SPECIAL OPTION
00=黑膠芯+ PCB (3A5V)+無線夾
01=黑膠芯+ PCB (3A5V)+帶線夾 (U2 28#+28#)
02=黑膠芯+ PCB (3A5V)+帶線夾 (U2 30#+28#+32#)
03=黑膠芯+ PCB (3A5V)+帶線夾 (U3.1 32#+32#+23#)
04=黑膠芯+ PCB (3A5V)+帶線夾 (U3.1 30#+34#+23#)

PACKING OPTION
0=TAPE & Reel Packing
1=Tube Packing
2=Tray paching

USB TYPE-C FULL-FEATURED RECEPTACLE INTERFACE PIN ASSIGNMENTS

PIN	Signal Name	Description	PIN	Signal Name	Description
A1	GND	Ground return	B12	GND	Ground return
A2	SSTXp1	Positive half of firs SuperSpeed TX differential pair	B11	SSTXp1	Positive half of firs SuperSpeed TX differential pair
A3	SSTXn1	Negative half of first SuperSpeed TX differential pair	B10	SSTXn1	Negative half of first SuperSpeed TX differential pair
A4	VBUS	Bus Power	B9	VBUS	Bus Power
A5	CC1	Configuration Channel	B8	CC1	Configuration Channel
A6	Dp1	Positive half of the USB 2.0 differential pair-Position 1	B7	Dp1	Positive half of the USB 2.0 differential pair-Position 1
A7	Dn1	Negative half of the USB 2.0 differential pair-Position 1	B6	Dn1	Negative half of the USB 2.0 differential pair-Position 1
A8	RFU1	Reserved for Future Use (RFU)	B5	RFU1	Reserved for Future Use (RFU)
A9	VBUS	Bus Power	B4	VBUS	Bus Power
A10	SSRXn2	Negative half of second SuperSpeed RX differential pair	B3	SSRXn2	Negative half of second SuperSpeed RX differential pair
A11	SSRXn2	Positive half of second SuperSpeed RX differential pair	B2	SSRXn2	Positive half of second SuperSpeed RX differential pair
A12	GND	Ground return	B1	GND	Ground return

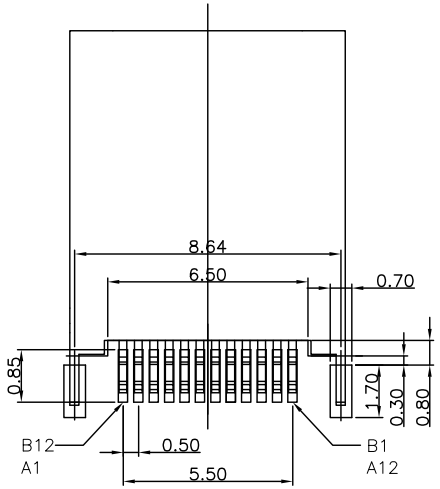

RECOMMENDED P.C.B. LAYOUT (T:1.00mm)
TOLERANCE UNSPECIFIED ±0.05mm

TOLERANCE UNIT(mm)		APPROVALS	DATE
X.	±0.30	DRAWN WINKI	06/20/2016
X.X	±0.25		
X.XX	±0.15	CHECKED JOHNSON	06/20/2016
X.XXX	±0.08	APPROVED JOHNSON	06/20/2016
ANGULAR	±2°		
UNLESS OTHERWISE SPECIFIED		UNIT MM	

TC&C Electronics Co.,Ltd

TITLE
USB 3.1 C FEMALE(夾板式(夾板厚度1.0MM)/24PIN)

SCALE N.A.	PART NO.	DRAWING NO.	REV.
SHEET 2 OF 3	T50E7702XXXX1ET	T50E7702XXXX1ET A	A
CUSTOMER CODE		CUSTOMER PART NO.	

CUSTOMER DRAWING

REVISIONS				
SYM	ECN No.	DESCRIPTION	DATE	APPROVED
A		NEW	06/20/2016	JOHNSON

一.

將成品依同一方向放入真空盤內, 如圖所示.

At same direction, put product onto the tray. Direction refers to below drawing.

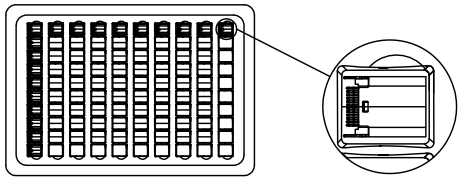

VIEW-1

二.

1) 一只紙箱可放置之包裝盤(包括上蓋)見下表.
1) trays per carton,please see next table.

2). 每1個紙箱用的包裝數量詳見下表。
2)The Q'ty of products per carton please see next tabel.

3) 將裝滿成品的真空盤用 PE帶捆緊後放在塑膠袋內, 裝完後再封箱。
3) Bind the trays with PE tape and then,put them into the poly bag. Seal the carton with tape.

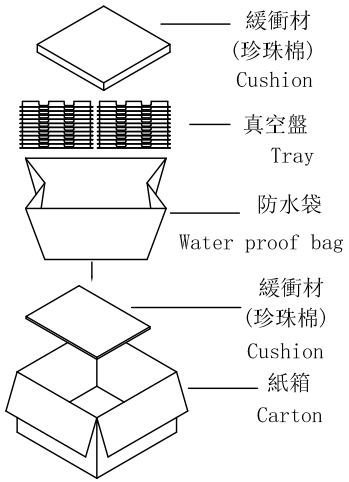

VIEW-2

三.

1). 將標籤貼於紙箱側麥上方.
Stick the needful label On the up-right corner of the side of carton.

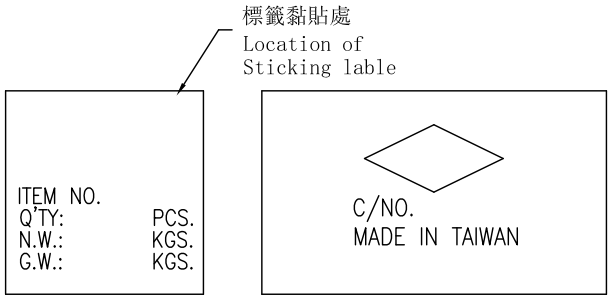

VIEW-3

備 註(REMARK)

1. 若有未裝滿之零數箱,必須以緩衝材塞滿.
   The unfilling-carton must be filled with assuagement.
2. 防水袋需用膠帶貼實且封口.
   waterproof plastic bag must be folded up.
3. 裝滿成品后之外箱，最大堆積箱數：5箱
   About the box fully filled with products, the MAX accumulating quantity of boxes is 5.
4. 如須貼Bar-code,請依Bar-code作業辦法執行
   If barcode lable is required,do it according to the related barcode lable operation standards.

包裝明細表	(The detail of the packing)					
產品料號 (Product No.)	包裝容量 (Packing Capacity)			重量 Weight (Kg)		
	pcs/box	boxs/Carton	Pcs/Box	N.W./Pcs	N.W./Box	G.W./Box
	100	50	5000			

TOLERANCE UNIT(mm)		APPROVALS	DATE
X.	±0.30	DRAWN WINKI	06/20/2016
X.X	±0.25		
X.XX	±0.15	CHECKED JOHNSON	06/20/2016
X.XXX	±0.08	APPROVED JOHNSON	06/20/2016
ANGULAR	±2°		
UNLESS OTHERWISE SPECIFIED		UNIT MM	

TC&C Electronics Co.,Ltd

TITLE
USB 3.1 C FEMALE(夾板式(夾板厚度1.0MM)/24PIN)

SCALE N.A.	PART NO.	DRAWING NO.	REV.
SHEET 3 OF 3	T50E7702XXXX1ET	T50E7702XXXX1ET A	A
CUSTOMER CODE		CUSTOMER PART NO.	