REVISIONS				
SYM	ECN No.	DESCRIPTION	DATE	APPROVED
AX1			9/08/2006	Joan

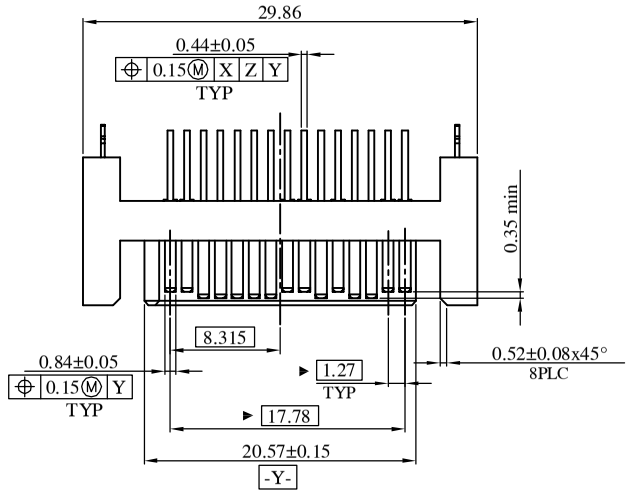

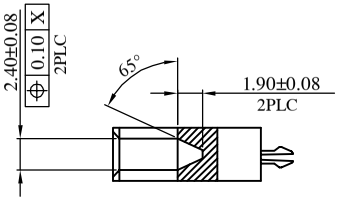

SECTION A-A

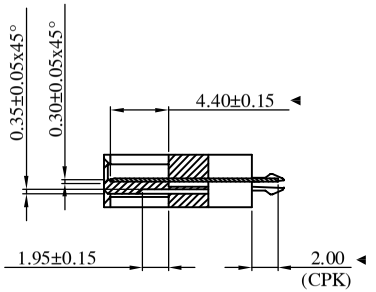

SECTION B-B

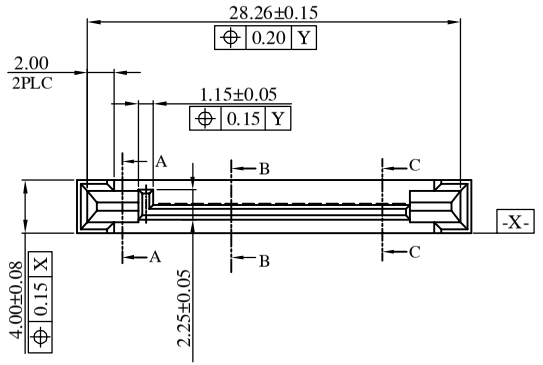

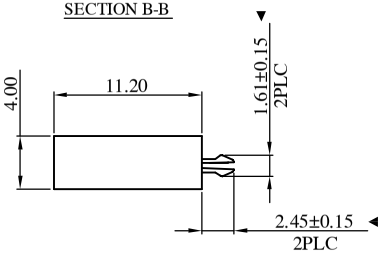

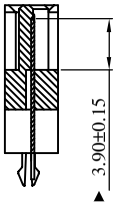

SECTION C-C

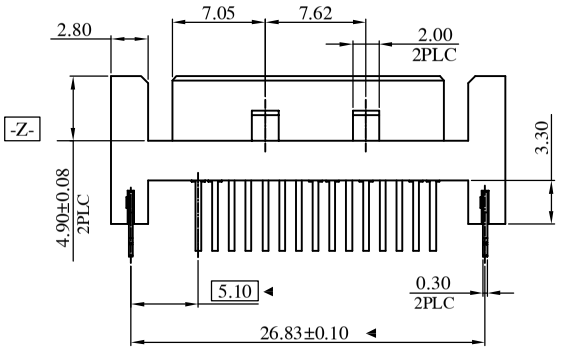

NOTES:

1.MATERIAL:

HOUSING:LCP(POLYPLASTICS E130i))WITH 30% G/F UL94 V-0
COLOR:BLACK

CONTACT: BRASS C2680R EH,T=0.25mm

2.FINISH:

CONTACT:15u" GOLD/TIN PLATING ON CONTACT AREA
100u" MIN.LEAD-FREE (100%) TIN PLATING ON SOLDERTAILS
50u" MIN.NICKEL UNDERPLATING OVER ALL

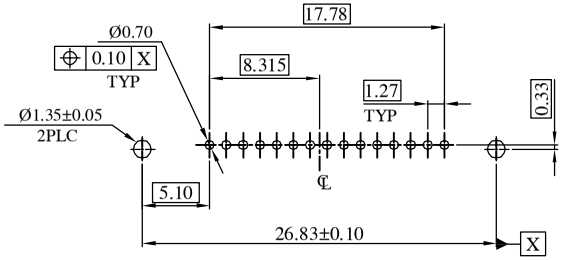

RECOMMENDED PCB LAYOUT
TOLERANCE: ±0.05

TOLERANCE UNIT(mm)		APPROVALS	DATE	TC&C Electronics Co,.Ltd			
X.	±0.38	DRAWN Joan	9/08/2006	TITLE SATA 15P板端魚叉直立式DIP型			
X.X	±0.25	CHECKED Tank Lee	9/08/2006				
X.XX	±0.15	APPROVED Johnson	9/08/2006	SCALE N.A.	PART NO.	DRAWING NO.	REV.
X.XXX	±0.08			SHEET 1 OF 1	T504851125206U4	SATA-1339C2A	AX0
ANGULAR	±2°	UNIT	MM	CUSTOMER CODE	CUSTOMER PART NO.		
UNLESS OTHERWISE SPECIFIED							

TC&C Electronic Co.,Ltd. RoHS Compliant
ISSUED BY TC&C TAIWAN PDF format D.C. 2006-08-14